GIULY® SL

design **Mariano Moroni**

EUROPEAN
WARRANTY

MATERIAL:
Super slim heating body in painted carbon steel.

FIXING KIT:
Brackets, airvent, hexagonal tool, plugs and screws for mounting suitable for use on compact or hollow brick, user notice.
The kit is certified from TÜV in compliance with VDI 6036-class 4.

VALVE KIT INCLUDES:
Valves
Fittings for copper pipe (Ø 12/14/15)
Fittings for multilayer pipe (Ø 16)

PACKAGING:
The radiator is protected by a film in polyethylene and with a carton box.
User notice included.

PAINTING PROCESS:
Painted with ecological epoxy. (Certificate DIN 55900-1,-2).
Thermal outputs certified in accredited laboratories in compliance with European norm EN442.

COLOURS:
Radiator and accessories: standard white colour R01.

PRODUCT CERTIFICATES

Pression maximale de service: 5 bar

Température maximale de service: 110° C

Available for central heating systems

Connexions: n° 2 x 1/2" gaz - n° 1 x 1/2" gaz

AWARD

product design award 2014

BEST PRODUCT AWARD

CORDIVARI DESIGN

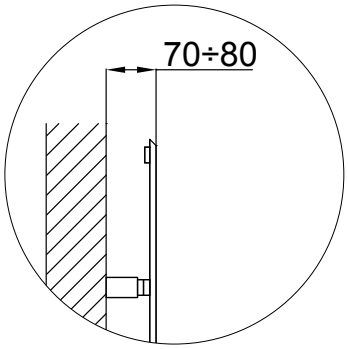

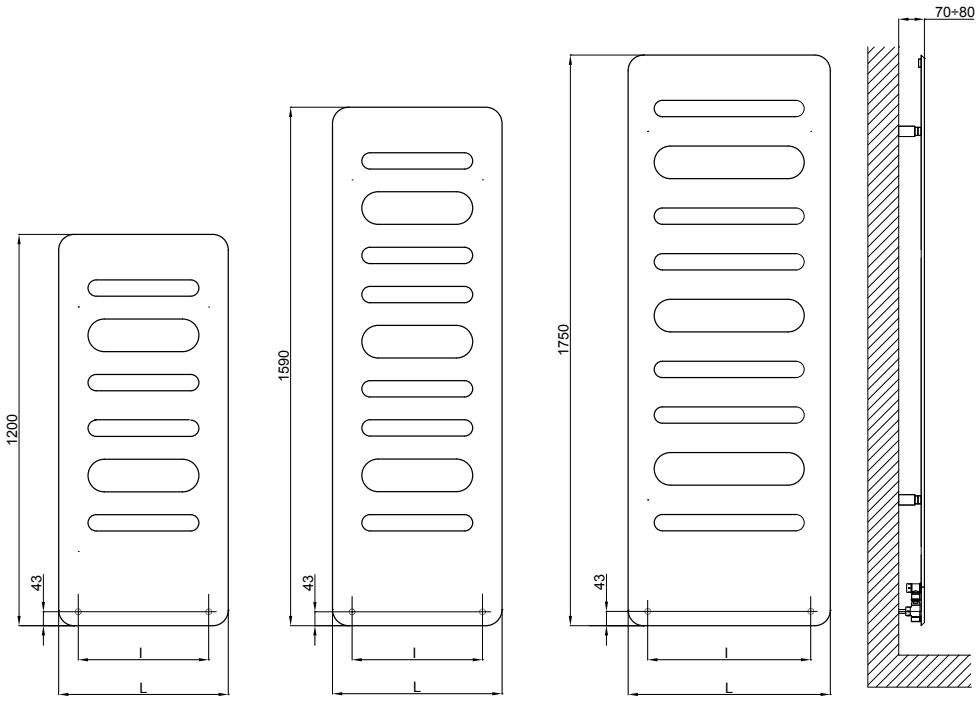

GIULY® SL

Art. Nr.	Height	Width	Pipe Centres	Dry Weight	Surface	Water Content	Thermal output Watt		Exponent n
	H [mm]	L [mm]	I [mm]	[Kg]	[m^2]	[lt]	**Δt = 50°C**	Δt = 30°C	
3540806100222	**1200**	520	400	16	0,90	0,90	523	275	1,2610
3540806100223	**1590**	520	400	20	1,16	1,16	718	379	1,2510
3540806100225	**1750**	620	500	26	1,50	1,50	903	468	1,2850

Art. Nr. are referred to colour WHITE R01 version.

Includes valves.

For output at different Δt than 50°C, please refer to the following formula: desired output = output at Δt 50°C x (desired Δt/50)^n